Meincke ovens.
If you can make it, we bake it.

Innovations for a **better world.**

BÜHLER

If you can make it, we bake it.

We've been in this business for a long time. Over the past 60 years we became the world's largest manufacturer of industrial tunnel ovens, and sustainability has been on our mind since the 1970s. Even then we knew that ovens would need to produce more efficiently while still being able to reduce baking times. So we started building convection ovens and took the first step towards more sustainable industrial baking.

Today we build tailor-made oven solutions adapted to our customers' needs. From direct and indirect fired convection ovens to hybrid ovens, high-temperature ovens and stone band ovens: we have the right oven for your product.
You'll find some examples in this brochure, but if you don't find your product on these pages simply contact us to find out which oven is right for you.

We produce more than 2 kilometers of oven modules each year. That's longer than the Champs-Elysées,

longer than the Walk of Fame, and about the length of 58,000 Danish butter cookies in a row.

Meincke tunnel ovens.
An overview.

Meincke Turbu

Best selling oven in the world! Not only is it the most energy efficient oven on the market, it saves maintenance costs through fast change-overs and short reaction times. It's perfect for products that require an even coloring, humidity control and mid-range temperatures.

Page 6

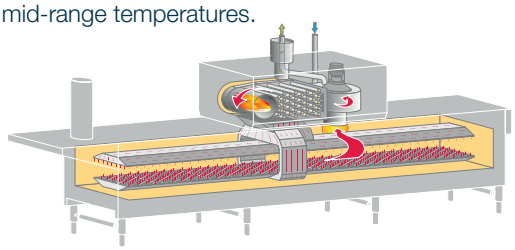

Meincke Direct Turbu

Suitable for products with an even baking color that require higher temperatures and high humidity. Meincke Direct Turbu ovens are also built for easy operation and low maintenance.

Page 8

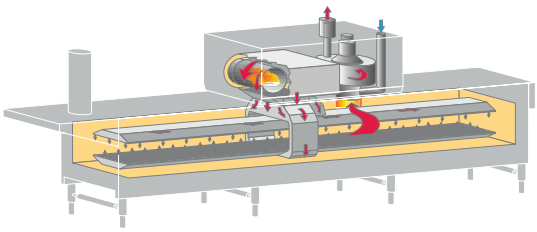

Meincke Direct

Supporting the distinct coloring of your bakery products with high temperatures and high moisture levels.

Page 10

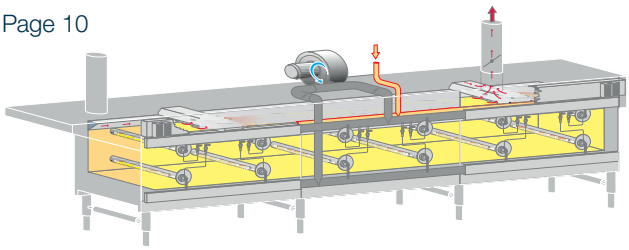

Meincke Radiant

The right choice for products which need a lower convection flow in the baking chamber.

Page 12

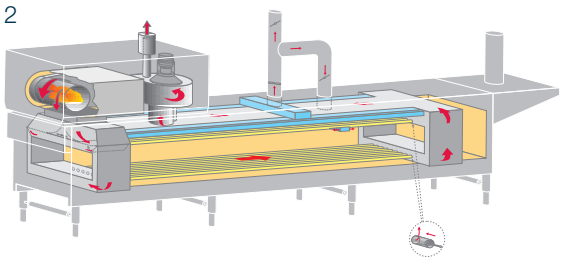

Meincke Hybrid

Combining high temperatures and high moisture levels with the ultimate in moisture control.

Page 14

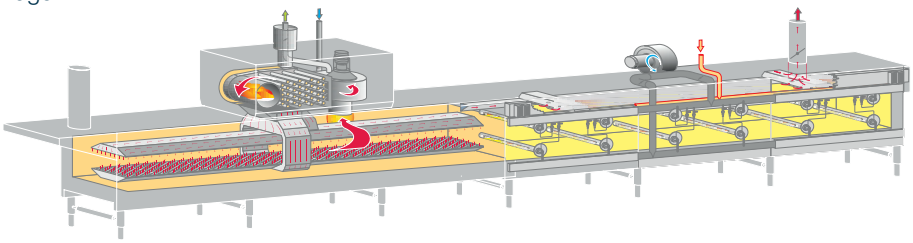

Operating principle

All ovens are pre-manufactured and supplied in two-meter modules. They are fitted with incorporated cable ducts, pre-insulated, pre-assembled, and tested prior to dispatch. All this to ensure a fast and easy installation of the oven at your site. To ensure efficient production, the baking chamber is floating on four isolated plates resting on the oven frame, avoiding direct contact. This way, no thermal stress builds up in the steel during heating up and cooling down and there is virtually no heat transfer to the outer frame. In addition, the control system constantly surveys the burners or electric heaters to only release the exact amount of energy needed for the baking process.

Customer Services

We are your partner from product ideas through training courses for your staff and consulting to maintenance and repairs. Find out more about service in every dimension on page 18.

Meincke Turbu tunnel oven.

Perfect for products that require an even coloring, humidity control and mid-range temperatures. Our Meincke Turbu ovens are simple to operate and need little maintenance.

Heating principle

A fan blows air into the burner chamber which is heated directly by the burner. The accruing heat is transferred to the heat exchanger room. There, air is heated up in a separate system and distributed to the baking chamber. This ensures that no combustion gases come into contact with the end product. A constant, correct baking temperature is achieved, which secures uniform baking results.

Air distribution system

An adjustable damper system with fans sends hot air into the top and bottom ducts. Distributing the heat this way ensures an ideal temperature level in the oven. The air in the oven is exhausted continuously, mixed with fresh air and returned to the heat exchanger. Any baking fumes are removed via flue.

Heat transfer

The convection system transfers most of the heat to the products. However, a significant amount of heat is generated by the hot baking band and the plenums. By adjusting the burner temperature, the air distribution between bottom and top plenum and the humidity profile, you can change the heat transfer in the oven significantly.

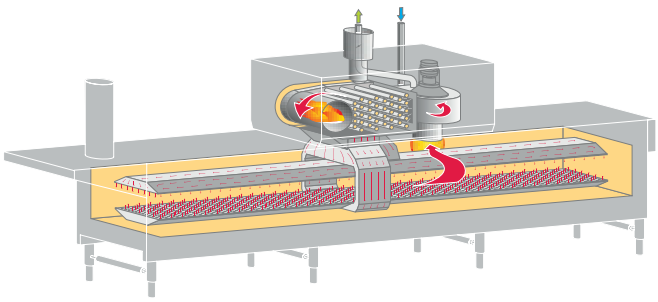

Energy efficiency

Optimized heat transfer for uniform baking results

The Meincke Turbu's double damper system optimizes the use of the burner heat, allowing you to save energy with the oven's fast response time.

Quality

Make the best of your recipes and ingredients

Thanks to over 60 years of experience, our ovens achieve uniform baking results and high repeatability of set-ups.

Flexibility

Modular design and adaptability

Our trademark is the 2 m long prefabricated module that makes it possible to combine different oven types. We also offer line extensions as part of our service and after sales portfolio.

Meincke Direct Turbu tunnel oven.

Suitable for products with an even baking color that require higher temperatures and high humidity. Meincke Direct Turbu ovens are also built for easy operation and low maintenance.

Heating principle

The heating source of the direct fired convection oven can be gas or electricity. The flame from the burner heats up the burner chamber. A fan blows the air down to the air distribution system. A temperature sensor controls the burner in order to secure a constant and correct baking temperature.

Air distribution system

An air distribution system leads the hot air into a top duct and / or a lower duct. A damper system adjusts the ratio between top and bottom heat. The air is distributed evenly in the baking room, securing an accurate temperature and air distribution. A vacuum sucks the process air from the baking room and returns it to the fan of the heat exchanger where it is reheated. A double damper system controls the amount of humid process air which is sent out and the amount of dry fresh air which is taken into the airflow. In this way it is possible to control the humidity in each heating zone.

Heat transfer

A convection system transfers the majority of heat to the products. However, a significant amount of conductive heat is generated from the baking band or the baking pans and by means of radiation from the hot oven muffle and plenums. By adjusting the temperature, top bottom heat and humidity profile in the oven, you can change the heat transfer significantly. If for instance your product needs more conductive and radiation heat in the beginning of the baking process, you can increase the amount of bottom heat and only direct a small amount of air volume to the top plenum.

Key benefits:

- Short baking time
- Uniform baking process
- Short heating-up and recovery time
- Low energy consumption
- Easy operation

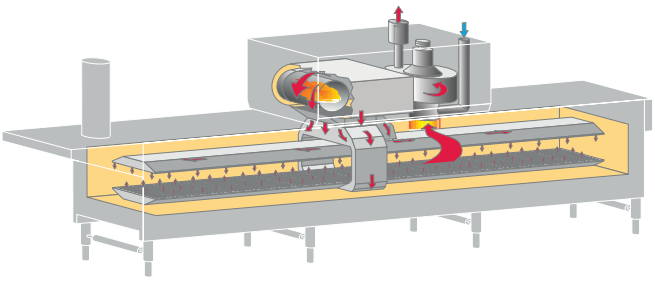

Meincke Direct tunnel oven.

Supporting the distinct coloring of your bakery products with high temperatures and high moisture levels.

Heating principle

The gas burners are located inside the baking chamber over and under the baking band. The burners operate with a zero gas pressure system. In each zone a blower sends a pressure-controlled airflow through the injectors of each burner. This way the correct amount of gas is drawn to the burners to achieve the correct temperature. Each burner can be selected from the control panel and turned on or off to achieve the correct settings for every product in each zone. A flame detection safety system ensures that there is no gas in the burner without a flame.

Air extraction system

In all direct fired ovens the air extraction system plays an important role in controlling not only the humidity, but also the temperature across the oven band.
There are suction canals on top of the baking chamber to extract humid air. There is a separate extraction fan for each heating zone, enabling you to control the humidity individually.

Key benefits:

- Output rated up to 50 kW/m^2
- Recipe-controlled burner system
- Easy baking chamber access every two meters
- Integrated cable trays

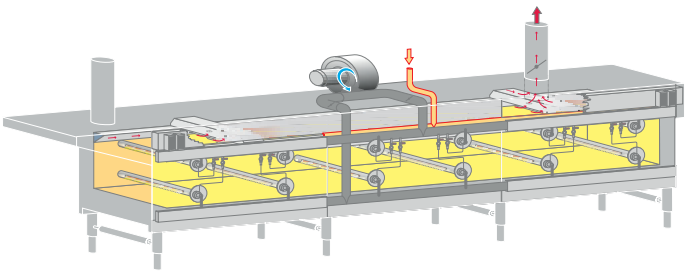

Meincke Radiant tunnel oven.

The right choice for products which need a lower convection flow in the baking chamber.

Heating principle

Our Meincke Radiant is a cyclothermic oven heated with oil or gas. The heated air is transferred via tubes to the top and the bottom of the baking chamber.

Air distribution system

The air is regulated through dampers for more or less top or bottom heat. For a uniform baking process, the heat distribution in the baking chamber can be regulated by dampers in the tubes. The regulation will be done at the commissioning of the oven. A damper system controls the amount of processed humid air which is sent out and the amount of dry fresh air which is taken into the oven. This makes it possible to control the humidity in each heating zone. Via suction dampers the air is sucked from the oven chamber to the exhaust duct. If required, some of the air can be regulated by dampers and recirculated through nozzles in a duct across the oven chamber.

Key benefits:

- Uniform baking process
- Easy operation with recipe control
- Hygienic design
- Full moisture control

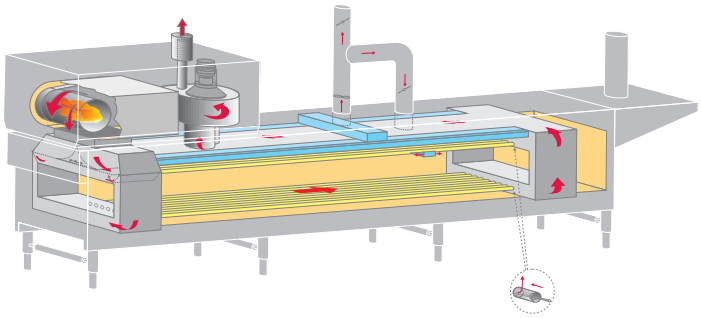

Meincke Hybrid tunnel oven.

Combining high temperatures and high moisture levels with the ultimate in moisture control.

Various types of hybrid ovens are available. All different oven types are manufactured as 2 meter-modules with the same baking chamber dimensions. Therefore it is possible for us to combine different heating systems to create the best oven configuration. The most common hybrid oven is a combination of a direct gas fired oven with a convection oven.

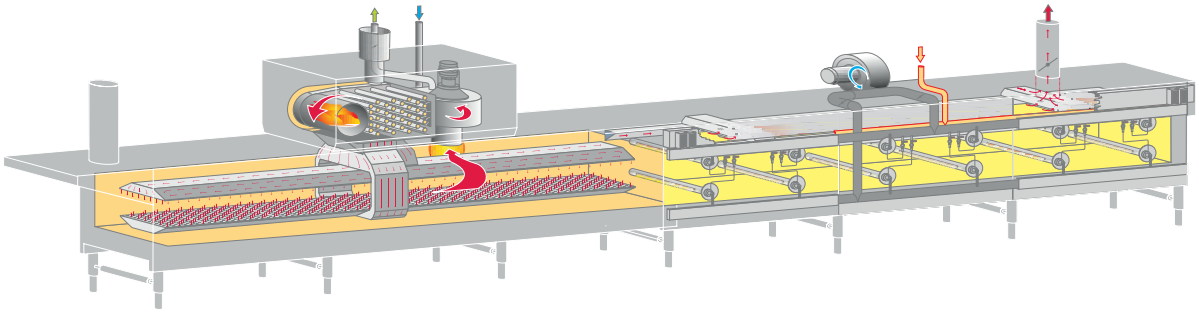

Energy efficiency

Optimize energy consumption with a hybrid oven

Combining a direct gas fired oven and a convection oven, direct or indirect heated, is ideal for the energy efficient production of crackers.

Quality

Make the best of your recipes and ingredients

Thanks to 60 years of experience, our ovens achieve uniform baking results and high repeatability of set-ups.

Flexibility

Modular design and adaptability

Our trademark is the 2 m long prefabricated module that makes it possible to combine different oven types. We also offer line extensions as part of our service and after sales portfolio

Accessories.

Oven conveyor system

Baking conveyors

The choice of baking conveyor depends on the nature of the product. Choose between solid steel bands, perforated steel bands, solid caterpillar bands, wire mesh bands, stone bands or special bands with built-in cup forms.

Conveyor details

The baking bands are driven by a frequency-controlled, infinitely variable gear motor. The oven band tensioning station ensures uniform band tension and smooth transport at changing temperatures.

Cooling systems

Hydro cooling of steel bands

The hydro cooling system cools the underside of the steel band with chilled water.
So far the hydro cooling system has been installed in hundreds of biscuit applications, especially on lines with limitations on building size and / or line length.
This method cools products down quickly and reduces cooling times down the line. The release of products from the belt is facilitated. The thermal load on the building is reduced because the heat from the steel band is removed by water.

Cooling tunnels

We supply two types of cooling tunnels. One takes air in from the outside and circulates it above and under the baking band. The other uses air which is refrigerated and recirculated by a cooling unit. Cooling tunnels are delivered in the form of 2-meter-modules of which both sides consist of hinged doors for full cleaning access.

Ambient cooling

To increase the efficiency of ambient cooling, multi jet fans can be mounted above or under the baking band. The multi jet fans distribute the air stream evenly across the entire width of the baking band.

Greasing unit

A greasing unit applies an even coating of grease to the baking band to facilitate the release of the baked products.

Control panel

Meincke equipment is cutting edge both in terms of its design and control of each machine.
The control system is a state of the art PLC system with a touch screen serving as the operator interface. All alarms and statuses, including trend curves for running the oven, are shown on the operator panel. The recipe controlled system makes product changeovers smooth and easy. For quick remote service the oven is equipped with an Ethernet modem for secure and encrypted communication directly to our technical team.

Heat recovery unit

Opt for our heat recovery unit which can save up to 15% of your oven's surplus heat. The unit can be installed in each zone, but it is not necessary to install it in all zones. The basic requirement is a temperature of at least 150 °C per zone and the fresh air intakes must be more than 50% open.

Benefits

- Reduction of CO_2 emissions
- Saving 15% of the surplus heat

How it works

The unit is mounted on top of the oven. The warm and humid exhaust air is led through tubes in the unit where fins capture the heat and transfer it to the cold intake air. This way, the heat of the exhaust air warms the cold intake air before entering the heat chamber of the oven. The special design of the heat recovery unit ensures that the humid exhaust air is not mixed with the fresh intake air.

Humidity control system

The humidity control system type 3800 is a unique tool for humidity control of large-scale baked products.

How it works

The humidity control system can be built into each individual zone. The system contributes to a product with accurately balanced residual humidity. The detailed settings make it easy to adjust humidity in the oven to create an optimal baking climate. A sensor continuously measures the absolute humidity which is displayed for accurate control.

Benefits

- Improved control of residual humidity in the product
- Improved shelf life of the product
- Increased residual humidity in the product resulting in reduced consumption of resources and energy
- Improved overall energy

Features

- Continuous control of absolute humidity in the baking air
- Uniform product quality
- Direct readouts
- Selective control of oven zone(s)
- Optimal baking air humidity and a substantial time saving on the process control
- Central control panels
- Programmable controls

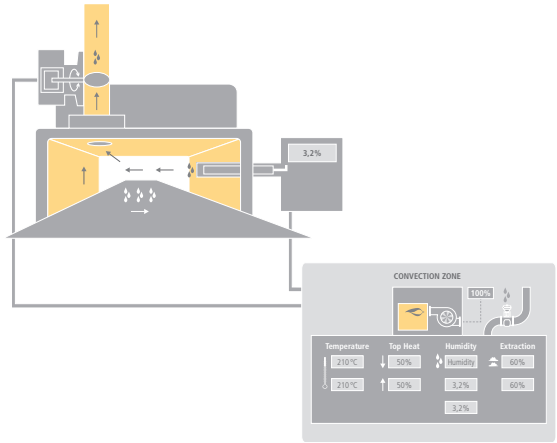

Customer Service
Your biscuit and cracker expert.

Bühler stands for more than just high-quality machinery and best value for money. We also stand for lifetime partnerships. To continuously keep your production at the highest productivity level, our customer service supports you in all service dimensions.

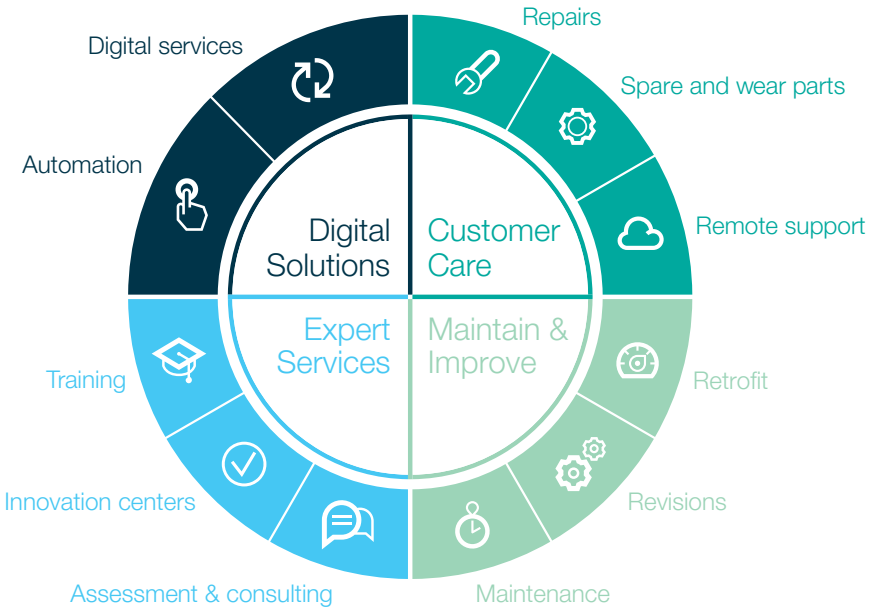

We provide ongoing support throughout your product lifecycle by offering all-round service solutions. Whether it's through training qualified staff, maintenance and repair, developing product ideas in our Innovation Center or assessing and consulting on your production - all designed to boost your performance.

Training

Training is crucial to know what Bühler machines can do – and to take full advantage of your plant. At our Biscuit Innovation Center or at your site anywhere in the world specially trained experts pass on their hand-on expertise and knowledge to your staff.

We offer technical and technological training as well as customized training courses tailored to your specific needs.

Biscuit Innovation Center

Get your idea ready for the market, in our Biscuit Innovation Center. It features two full-scale production lines for cookies or crackers with forming equipment and ovens, where new recipes and products can be developed and different types of machines can be tested – whatever you require.

Ovens

The ovens available for testing are set up in extension of the cookie line and the cracker line. The cookie line has a 10 meter indirect fired convection oven and the cracker line is set up with a 14 meter hybrid oven consisting of an 8 meter direct gas fired oven and a 6 meter indirect fired convection oven, both ovens operate on gas.

Cracker line

Cookie line

Retrofits

Don't miss the opportunity to increase the productivity of your production lines. We offer several retrofit kits to update or upgrade your biscuit machines depending on your needs and your individual targets.

Retrofits can improve the following:

Food safety Employee safety Productivity
Product quality & consistency Availability
Efficiency Sustainability Product variety

Oven extensions

Action:

- Extending the oven
- Any type of oven can be extended

Benefits:

- Boost production
- Increase product variety

Electric burner upgrade

Action:

- Replacing gas with electric burners

Benefits:

- No exhaust of hot air
- No CO_2 emissions
- Sustainable production

Heat recovery unit

Action:

- Warm and humid exhaust air is led through tubes in the unit
- Cold intake air is preheated before entering the heat chamber of the oven

Benefits:

- Reduction of CO_2 emission
- Saving of up to 15% of the surplus heat

Bühler AG

CH-9240 Uzwil
Switzerland

HAAS-MEINCKE A/S

2740 Skovlunde
Denmark

consumerfoods@buhlergroup.com
www.buhlergroup.com

CF_MeinckeOvens_EN|10.19|SM